8MP Network LumiLuxSmart Bullet Camera (2.8 mm)

N5B-8LA2



Key Features

- 8MP Bullet Housing
- 2.8 mm Fixed Lens
- LumiLuxSmart: IR and White-Light LEDs
- Video Content Analytics+: Line Crossing, Intrusion, Loitering Detection, Parking Detection
- LumiAnalytics: Face Detection, People Counting, Heat Map, Queue Management, Smart Object Detection
- LumiSearch+
- iMD
- LumiPower
- LumiPolarPro and LumiDesertPro

Certifications and Compliance

- NDAA Compliant
- FCC
- IC
- UL

Learn More

Learn more about this product's key technologies.

View all compatible accessories for this product.

Overview

Luminys is lighting the way for flexible low-light solutions with the LumiLuxSmart N5 Mainstream Series, the industry's most extensive dual-functioning camera lineup.

LumiLuxSmart cameras allow users to switch between three low-light functionalities: covert IR-only mode, nighttime white-light LED lighting, and motion-activated IR and LED dual-illumination. The brightness and intensity of the white-light LEDs can be remotely adjusted, preventing unnecessary light pollution.

The LumiLuxSmart series provide unparalleled customization and flexibility to meet the needs of today's evolving security market.

Key Technologies

LumiLuxSmart technology allows cameras to capture clear, full-color video day or night. When motion is detected, LumiLuxSmart cameras switch from IR LEDs to white-light LEDs to illuminate a scene, then switch back to IR mode once motion has ceased to prevent light pollution and energy inefficiency.

LumiSearch+ technology lets you quickly find, track, and identify targets in security footage using a reference image. The LumiSearch+ algorithm analyzes human body shape, clothing color, and other characteristics to accurately pinpoint where a target has appeared in footage captured by any LumiSearch+-enabled camera and NVR.

LumiAnalytics technology uses detailed metadata and advanced AI algorithms to track important metrics such as people counting and behavior analysis. These insights give businesses highly valuable information to improve and optimize operations.

LumiPower technology enables long-distance Power over Ethernet transmission, extending power and data delivery up to 3,000 feet. This simplifies installations in larger or more complex environments by eliminating the need for additional power sources or repeaters. LumiPower ensures consistent connectivity and dependable power management, ideal for expansive security infrastructures.

LumiPolarPro and **LumiDesertPro** technology ensure rugged all-weather performance. Depending on the product model, LumiPolarPro enables dependable performance in -40 °C (-40 °F) or lower, and LumiDesertPro allows operation in temperatures 60 °C (140 °F) or higher.

Specifications

Camera

Luminys Series	Mainstream
Image Sensor	1/1.8-in. 8MP Progressive CMOS
Maximum Resolution	3840 × 2160
Minimum Illumination	Color: 0.0005 Lux at F1.0 Black/White: 0.0003 Lux at F1.0 0 Lux With IR Light On
Number of Illuminators	IR LED: Two (2) White Light: Two (2) Supports LumiLuxSmart
Illuminator Control	Automatic, Manual
Maximum Illumination Distance	IR: Up to 30.0 m (98.0 ft) White Light: Up to 30.0 m (98.0 ft)
Electronic Shutter Speed	Automatic, Manual 1/3 s to 1/100,000 s
Installation Angle	Pan: 0° to 360° Tilt: 0° to 90° Rotation: 0° to 360°
S/N Ratio	> 50 dB

Lens

Iris Type	Fixed
Lens Type	Fixed
Focal Length	2.8 mm
Maximum Aperature	F1.0
Field of View	Horizontal: 109° Vertical: 59° Diagonal: 131°
Close Focus Range`	2.1 m (6.9 ft)
DORI Distance	Detect: 82.0 m (269.0 ft) Observe: 32.8 m (107.6 ft) Recognize: 16.4 m (53.8 ft) Identify: : 8.2 m (26.9 ft)

Video

Compression	Smart Encoding H.265+, H.265, Smart Encoding H.264+, H.264, MJPEG (Sub Stream Only)
Stream Capability	Three (3) Streams
Resolution	8MP (3840 × 2160), 6MP (3072 × 2048), 5MP (3072 × 1728), 5MP (2592 × 1944), 4MP (2688 × 1520), 3.6MP (2560 × 1440), 3MP (2048 × 1536), 3MP (2304 × 1296), 1080p (1920 × 1080), 1.3MP (1280 × 960), 720p (1280 × 720), D1 (704 × 576/704 × 480), VGA (640 × 480), CIF (352 × 288/352 × 240)
Maximum Frame Rate	Main Stream: 3840 × 2160 at 30 fps Sub Stream 1: D1 at 30 fps Sub Stream 2: 1080p at 30 fps
Video Bit Rate	H.265: 12 kbps to 13568 kbps H.264: 32 kbps to 16384 kbps
Bit Rate Control	CBR/VBR

Video

Day/Night	Automatic (ICR), Color, Black and White
Light Balancing	Wide Dynamic Range (120 dB)
Noise Reduction	3D NR
Image Rotation	0°/90°/180°/270° (Supports 90°/270° with 4MP Resolution and Lower)
Mirroring	Supported
Defog	Supported
Region of Interest	Four (4) Zones
Privacy Masking	Four (4) Zones

Analytics

Video Content Analytics	Line Crossing, Intrusion, Loitering Detection, Parking Detection
Intelligent Motion Detection	Supported with Alarms for Vehicles and Humans
Face Detection	Capture Snapshots and Facial Attributes
Heat Map	Supported
People Counting	Tripwire and In-Area People Counting, Queue Management With Report
LumiSearch+	Supported When Used With LumiSearch+-Enabled NVRs
LumiAnalytics	Face Detection, People Counting, Heat Map, Queue Management, Smart Object Detection
Object Monitoring	Supported

Audio

Compression	G.711a, G.711Mu, PCM
Interface	Input: Built-in Microphone and 1-channel RCA Input Output: 1-channel RCA Output

Alarm

Event	No SD Card, Disk Full, SD Card Error, Offline, IP Conflict, Illegal Access, Motion Detection, Video Tampering, Line Crossing, Intrusion, Loitering Detection, Parking Detection, Scene Changing, Audio Detection, Voltage Detection, External Alarm, Face Detection, iMD, Security Exception, Area People Counting, Stay Alarm, People Counting, People Number Exception Detection, Object Monitoring
Interface	Input: One (1) Channel (Max. 5 VDC, 5 mA) Output: One (1) Channel (Max. 12 VDC, 300 mA)

Network

Protocol	RJ-45 (10/100 Base-T)
Protocol	IPv4, IPv6, HTTP, TCP, RTSP, RTMP, SNMP, FTP, NAS, DHCP, DDNS, QoS, UPnP, NTP, Multicast, NFS, PPPoE, SNMP
Interoperability	ONVIF (Profile S/G/T), API, SDK
Browser	Chrome, Firefox, Edge
Client	LumiViewer, LumiViewer Mobile App
Strorage	FTP, NAS, Micro SD Card (Max. 512 GB)

Electrical

Power Supply	12 VDC, PoE (802.3at), LumiPower
Power Consumption	12 VDC • Maximum: 8.3 W • Normal: 4.1 W PoE • Maximum: 9.8 W • Normal: 5.2 W

Construction

Net Weight	1.1 kg (2.3 lb)
Gross Weight	1.3 kg (2.9 lb)
Operating Temperature	-40 °C to 60 °C (-40 °F to 140 °F) < 95% RH (Non-Condensing)
Storage Temperature	-40 °C to 60 °C (-40 °F to 140 °F)
Protection Ratings	IP67, IK10

Construction

Dimensions	290.6 mm × 98.6 mm × 88.2 mm (11.4 in. × 3.9 in. × 3.5 in.)
Material	Metal

Certifications and Compliance

Certifications	FCC, IC, UL
Compliance	NDAA

Dimensional Drawing

mm [in.]

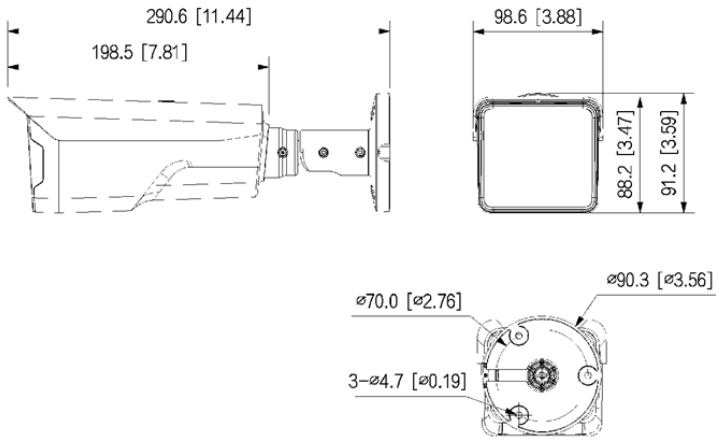

Compatible Accessories

Below are the compatible accessories for this product. Not all accessories are included with purchase; some must be purchased separately. For each mount type, all listed SKUs are required to ensure proper installation.

Cross-check the accessories in this datasheet with the Luminys accessory selector tool, and verify that the mount size corresponds to the camera size. Failure to check may result in an incorrect or incomplete mount.

Accessory Combination	SKU(s)	Description
Junction Box*	LUM-J01 *(Must be Purchased Separately)*	Junction Box for Select Standard Size Bullet Camera Models
	LUM-A04 *(Must be Purchased Separately)*	G3/4 in. Water Joint for Standard Size Bullet Junction Boxes
Vertical Pole Mount*	LUM-J01 *(Must be Purchased Separately)*	Junction Box for Select Standard Size Bullet Camera Models
	LUM-A04 *(Must be Purchased Separately)*	G3/4 in. Water Joint for Standard Size Bullet Junction Boxes
	LUM-P02 *(Must be Purchased Separately)*	Pole Mount Bracket for Select Standard Size Bullet, Dome, and Turret Cameras
Corner Mount*	LUM-J01 *(Must be Purchased Separately)*	Junction Box for Select Standard Size Bullet Camera Models
	LUM-A04 *(Must be Purchased Separately)*	G3/4 in. Water Joint for Standard Size Bullet Junction Boxes
	LUM-C01 *(Must be Purchased Separately)*	Corner Mount Bracket for N3/N5/N9/P4/P5 Series Cameras

*All SKUs listed must be used to complete the mounting combination. Verify the compatibility of the listed mounting components prior to ordering. Failure to use all SKUs listed and ensure compatibility may result in an incorrect or incomplete mount.

Rev. 4 | © 2026 Luminys Systems Corporation. All rights reserved. Design and specifications are subject to change without notice.